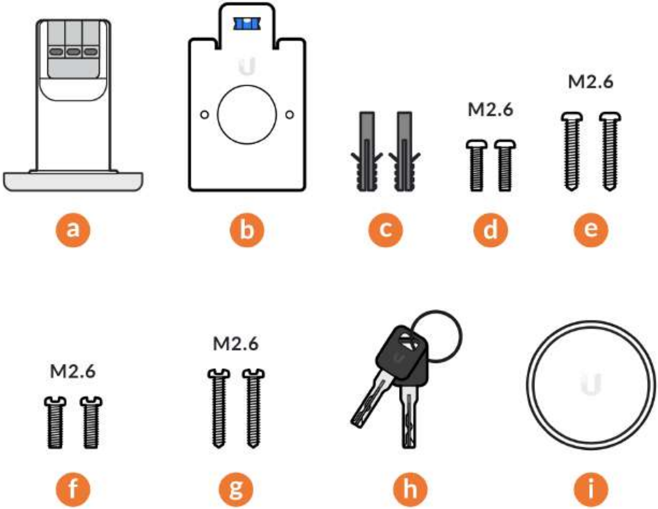
M2.6
M2.6
a
b
c
d
e
M2.6
M2.6
f
g
h
i

1

A

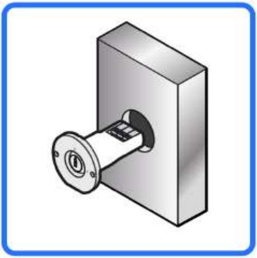

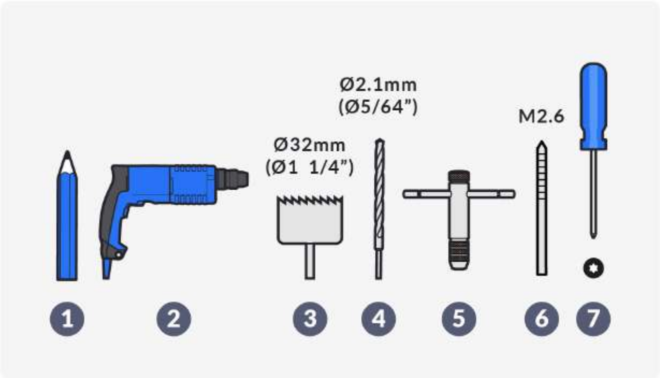
Ø2.1mm
(Ø5/64")
M2.6
Ø32mm
(Ø1 1/4")
1
2
3
4
5
6
7

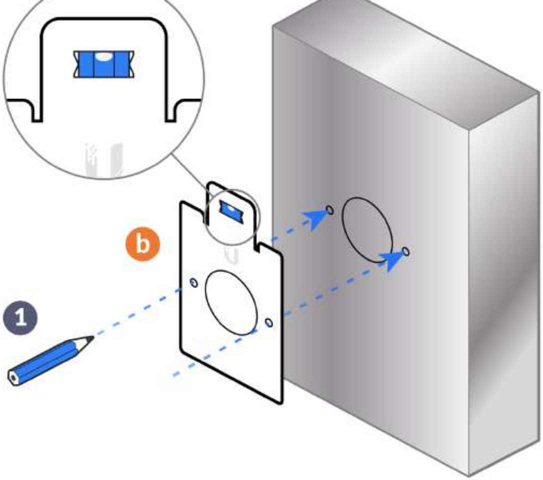

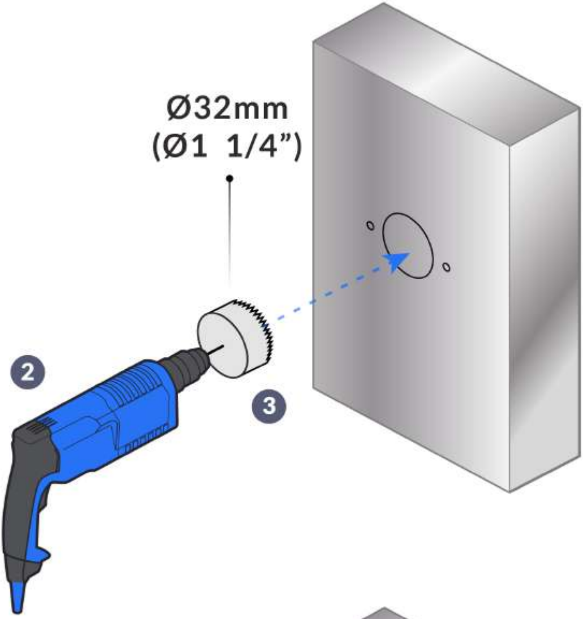
Ø32mm
(Ø1 1/4”)
2
3

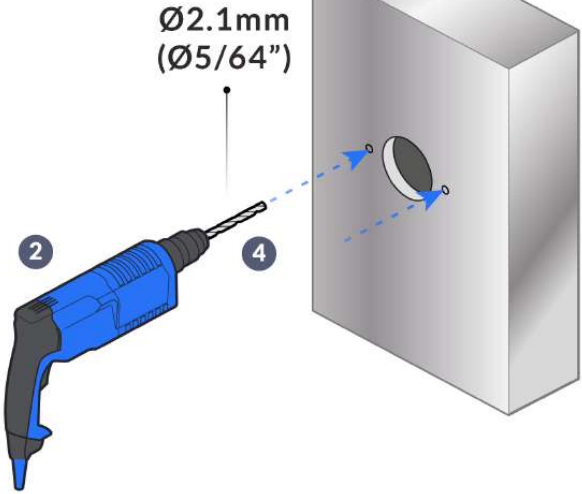
Ø2.1mm
(Ø5/64")
2
4

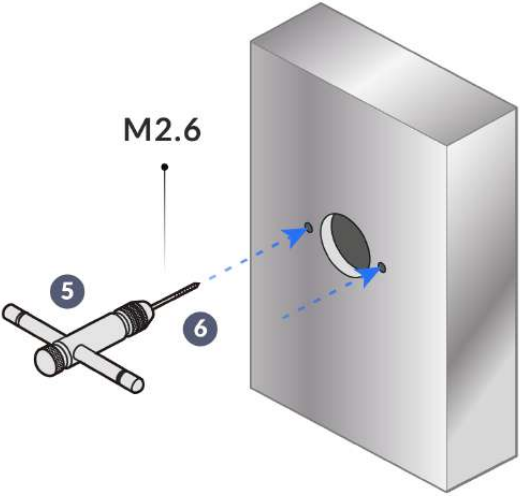

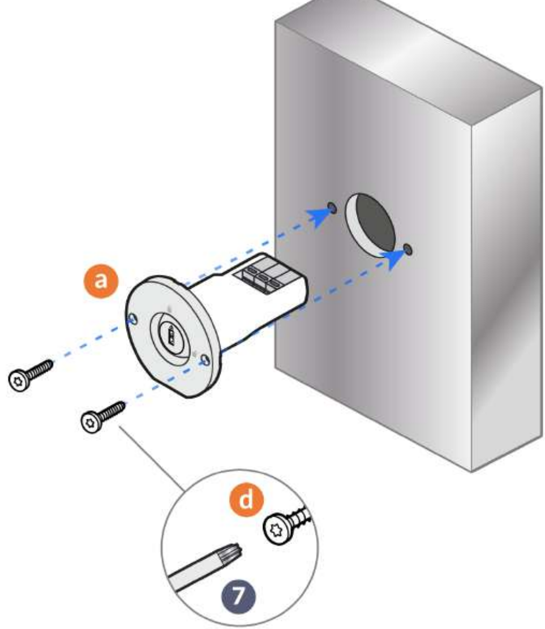

B

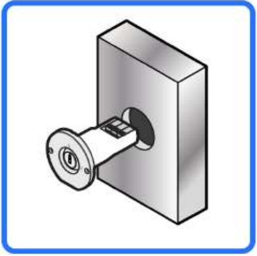

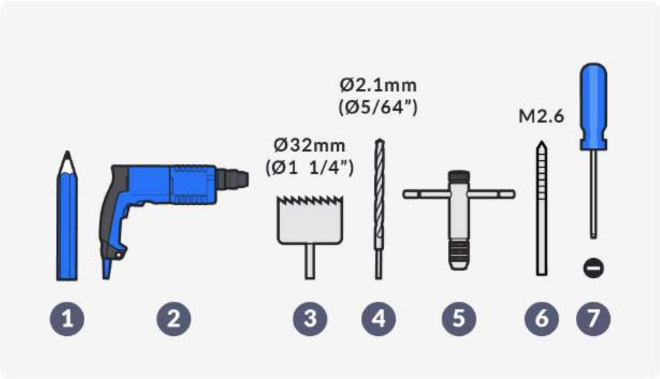
Ø2.1mm
(Ø5/64”)
M2.6
Ø32mm
(Ø1 1/4”)
1
2
3
4
5
6
7

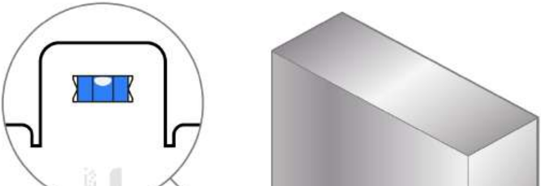

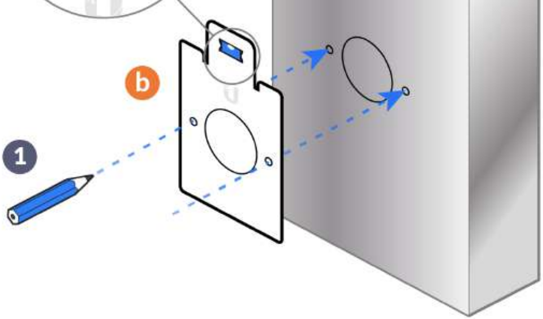

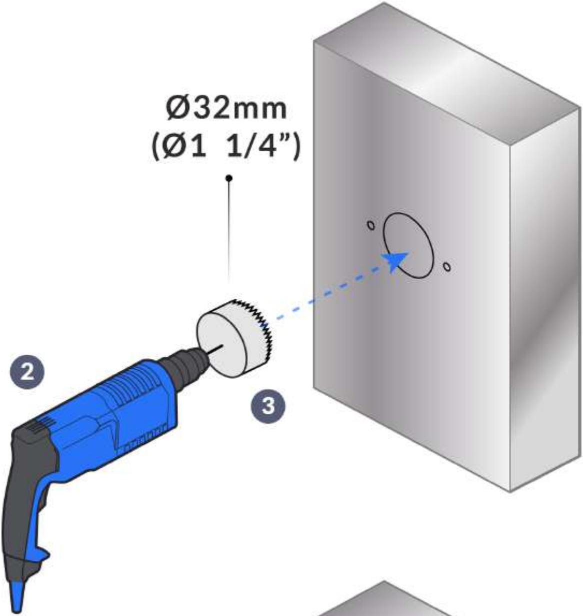
Ø32mm
(Ø1 1/4")
2
3

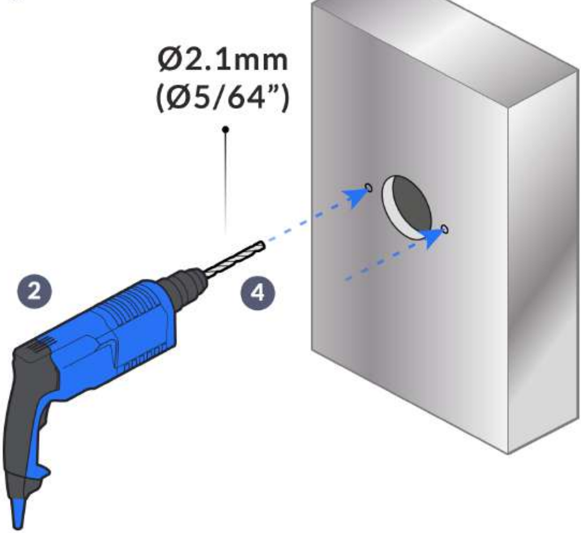
Ø2.1mm
(Ø5/64”)
2
4

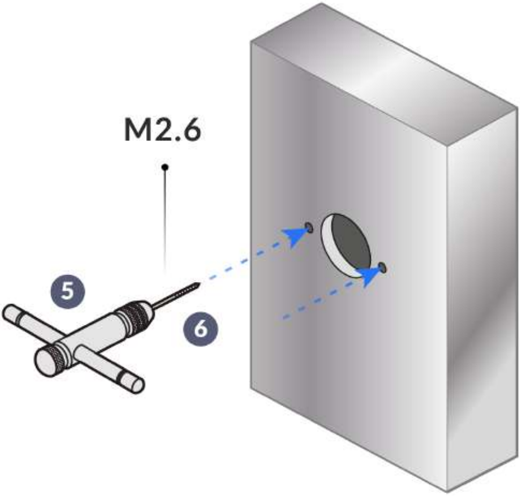

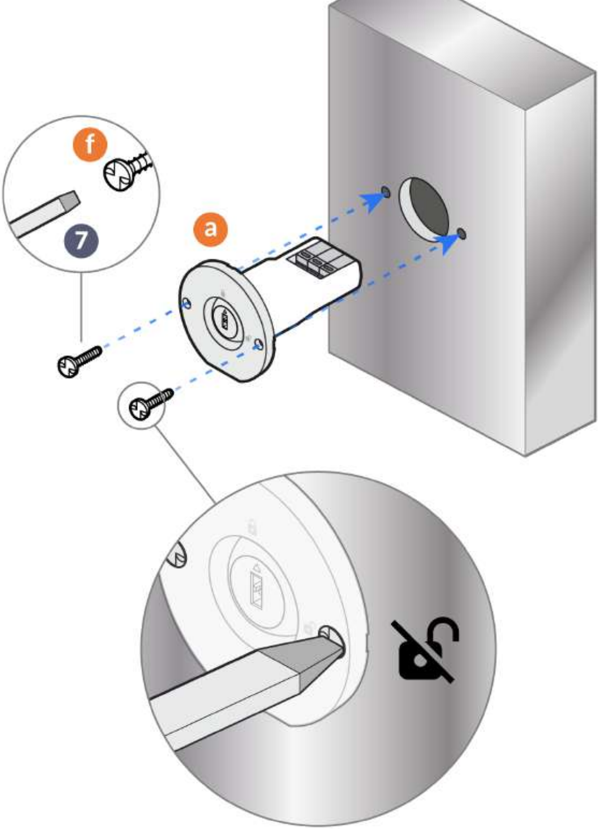

C

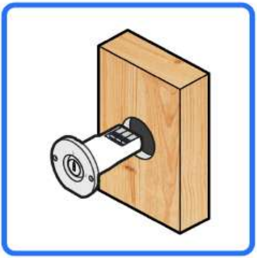

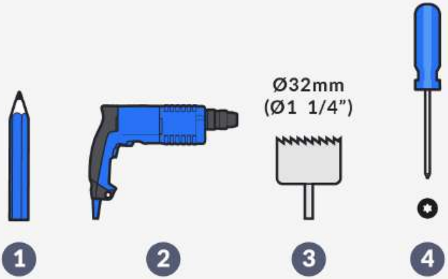
Ø32mm
(Ø1 1/4")
1
2
3
4

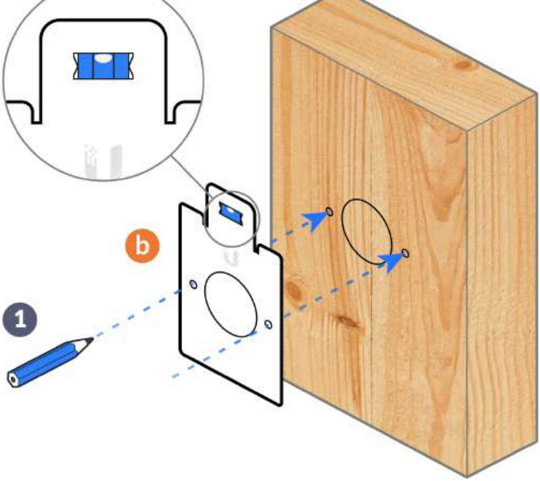

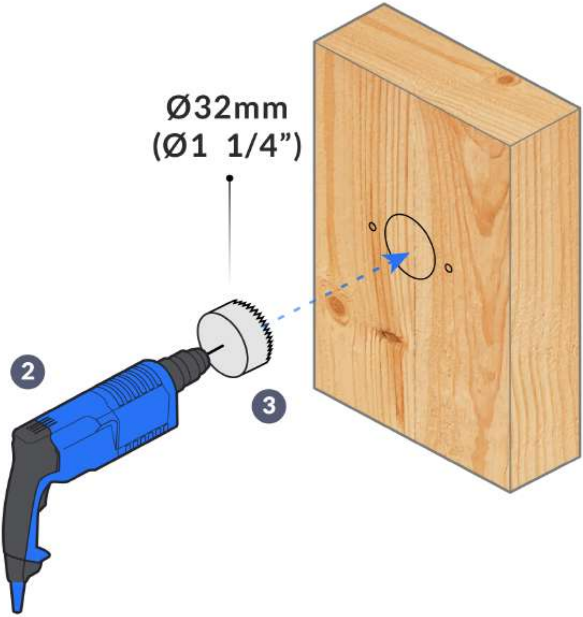
Ø32mm
(Ø1 1/4")
2
3

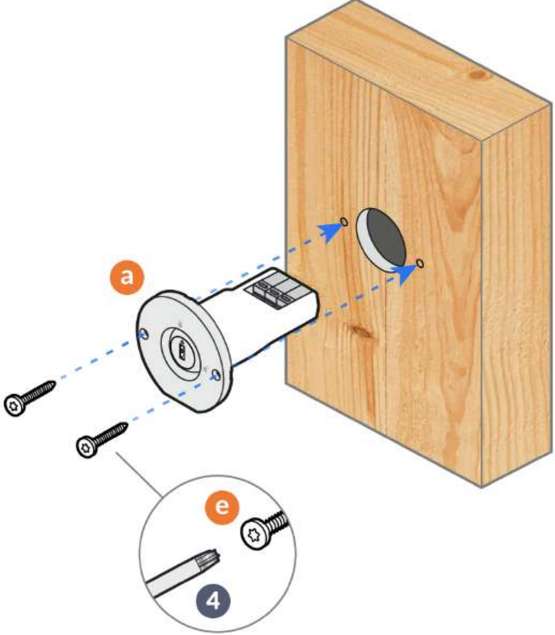

D

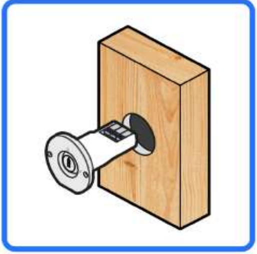

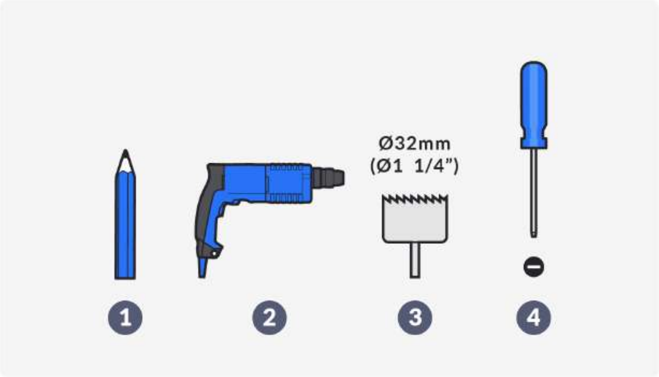
Ø32mm
(Ø1 1/4”)
1
2
3
4

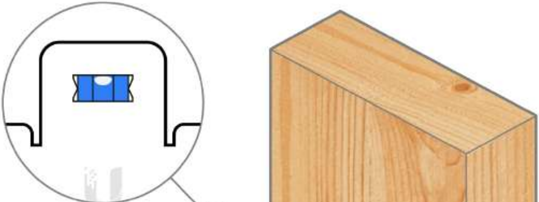

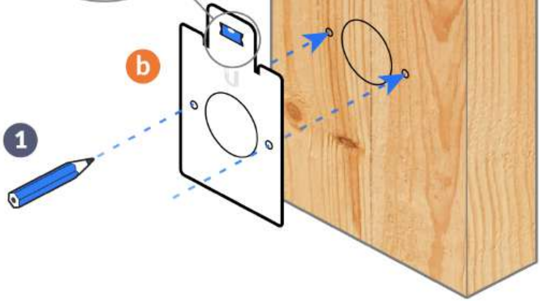

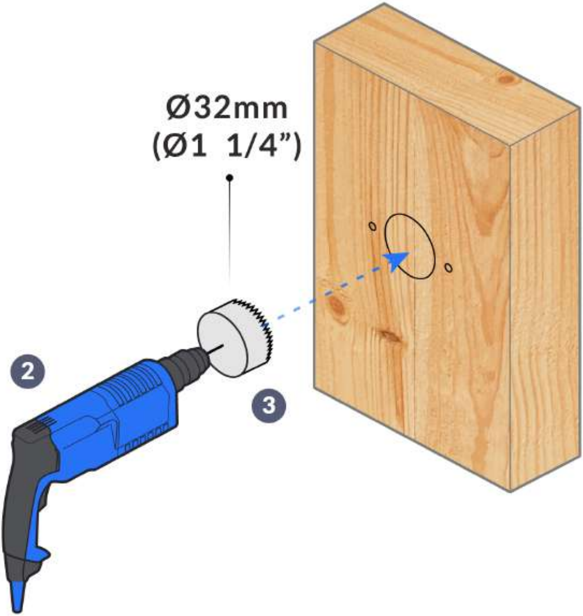
Ø32mm
(Ø1 1/4”)

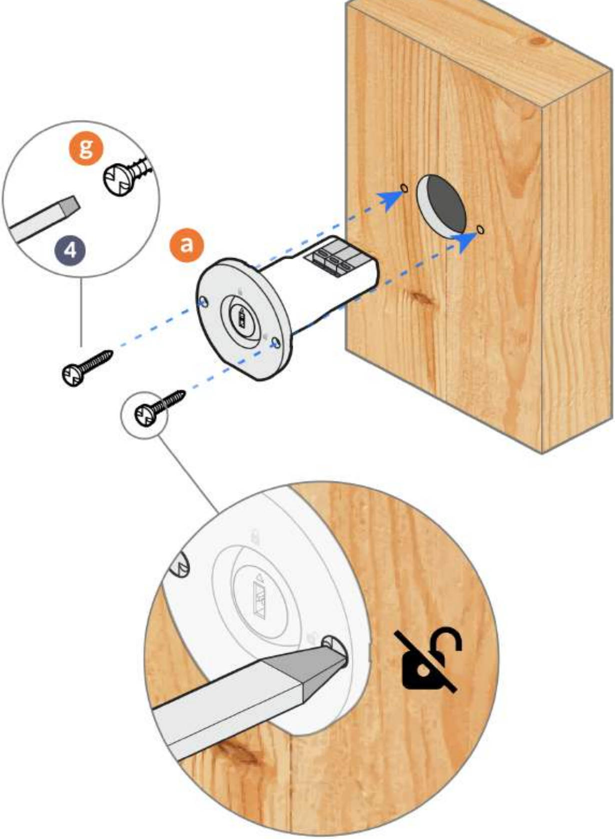

2

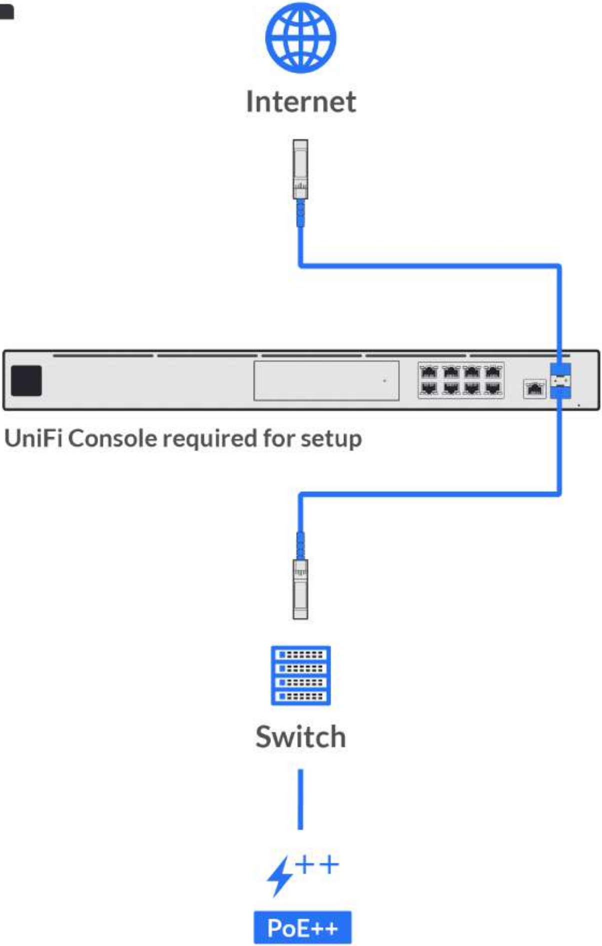
Internet
Switch
PoE++

UniFi Console required for setup

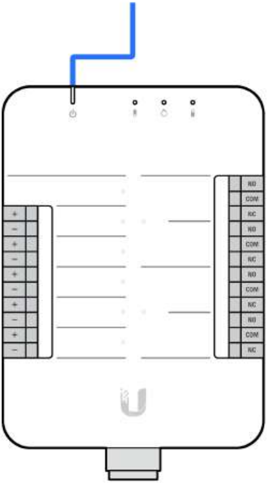

+
−
+
−
+
−
+
−
+
−
+
−
NO
COM
NC
NO
COM
NC
NO
COM
NC
NO
COM
NC

3

A

Magnectic Lock / Power Relay

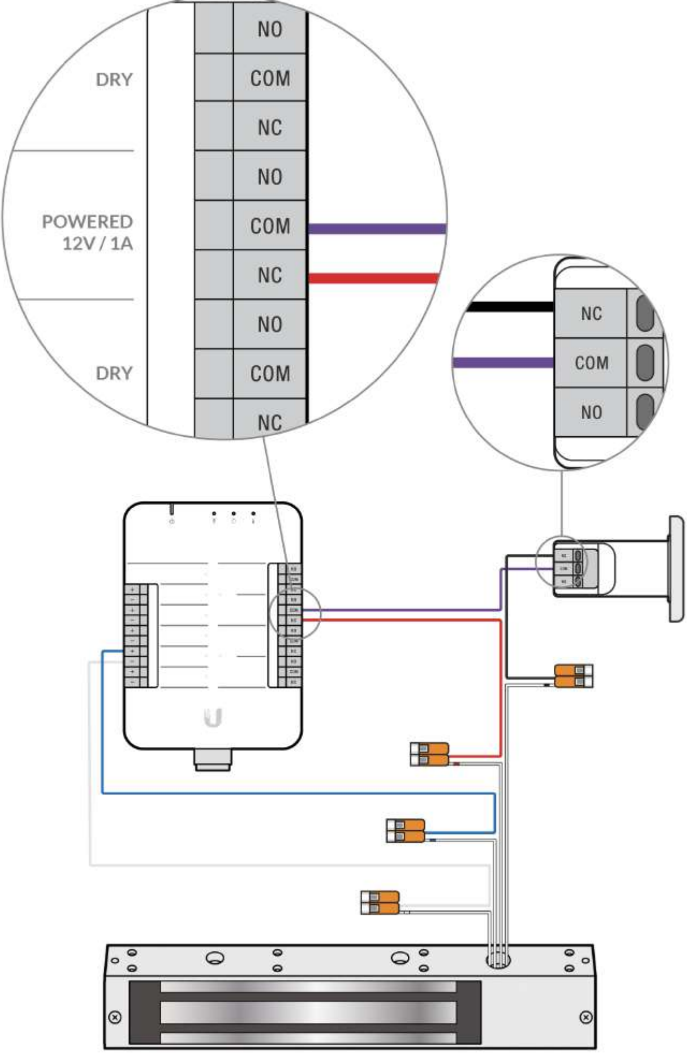
NO
DRY
COM
NC
NO
POWERED
12V / 1A
COM
NC
NO
DRY
COM
NC
NC
COM
NO

B

Magnectic Lock / Dry Relay

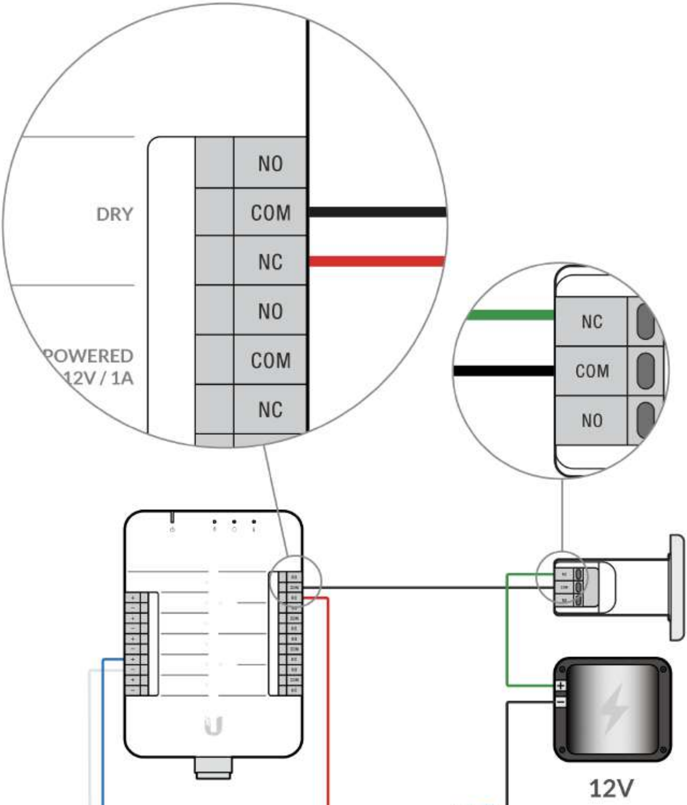
DRY
NO
COM
NC
POWERED
12V / 1A
NO
COM
NC
NC
COM
NO
12V

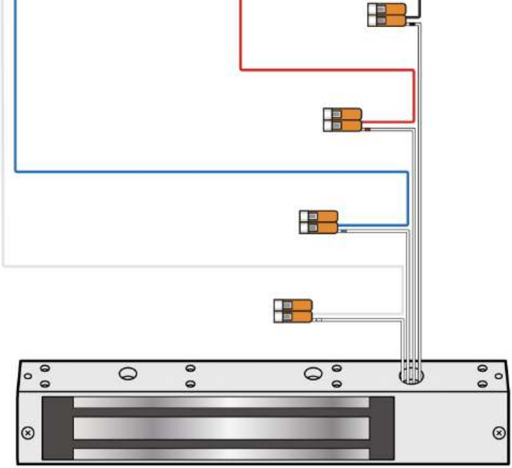

C

Electric Lock / Dry Relay

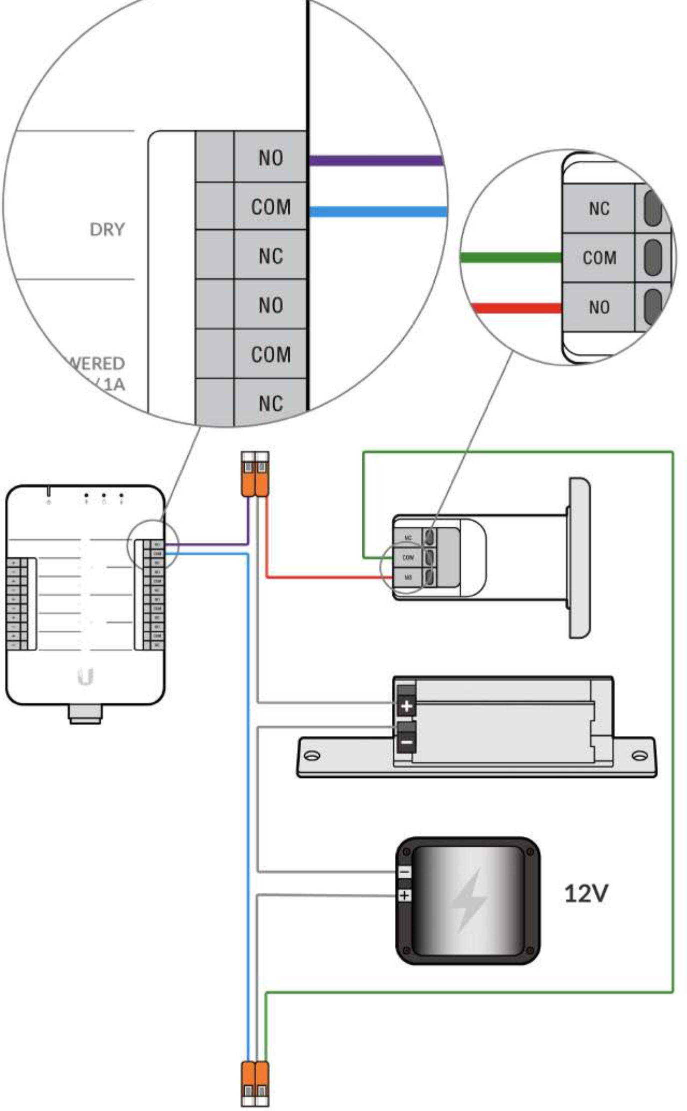
NO
COM
DRY
NC
NO
COM
WERED
/ 1A
NC
NC
COM
NO
+
−
−
+
12V

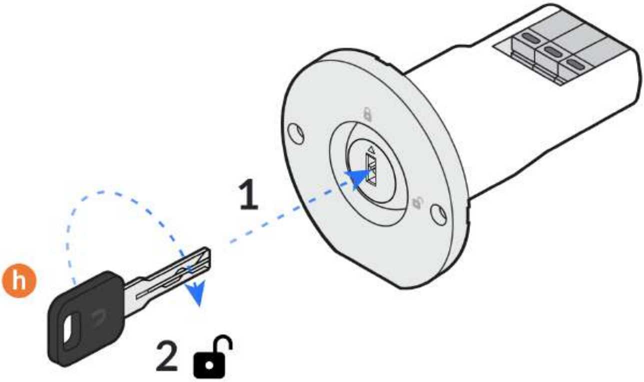

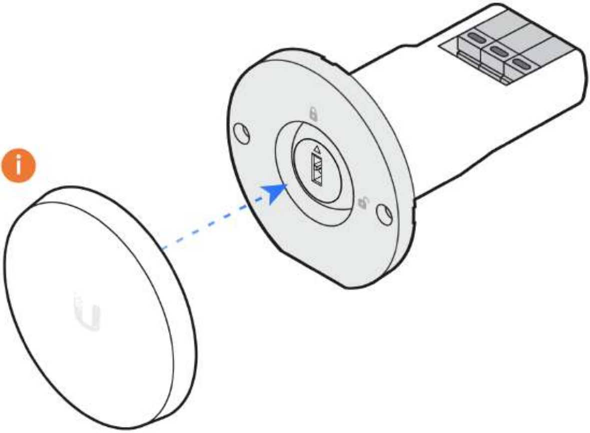

Get Answers
help.ui.com

UI Support

©2021 Ubiquiti Inc. All rights reserved. Ubiquiti, Ubiquiti Networks, the Ubiquiti U logo, and UniFi are trademarks or registered trademarks of Ubiquiti Inc. in the United States and in other countries. All other trademarks are the property of their respective owners.